FURNITURE FOR INSPIRED LEARNING.® SMITHSYSTEM®

planner huddle-8LS student desk

model #: 01267

huddle-8LS student desk (8 foot circle)

DIMENSIONS + FREIGHT:

MODEL #	D"	W"	H"	F.C.	CUBE	WEIGHT
01267	24"	30"	22" - 32"	70	1.4	42 lbs.
carton	38"	26"	6"			

OVERVIEW:

The Huddle-8 LS desks' unique trapezoid shape lends flexibility to instructors to create and rearrange classroom layouts throughout the day. Place desks back to back for testing arrangements or group multiple desks together in a circle for collaborative learning.

The 1 1/4" or 3/4" thick ***WORK SURFACE*** consists of a 45 lb density particle board core with a .030" high pressure laminated surface and a .020" melamine backer sheet. The edge of the work surface features bumper edge molding that is fastened every 6 to 8 inches to assure a long lasting fit. The top is pre-drilled for ease of installation.

The ***FRAME*** consists of 2 corner post leg sets, each leg set consisting of (2) 1 1/4" square 14-gauge tube legs, (2) 1" square 14-gauge steel tube chrome inserts, (1) 1" square 14-gauge steel cross-bar with (1) 7/8" diameter 1 1/2"h back pack peg and a 14-gauge steel plate. Legs adjust in 1" intervals from 22" -32" high. Leg sets are attached together at the rear with a 6" high, 18-gauge steel panel. Legs have 1" adjusting leveling glides.

PLANNER HUDDLE TOP & EDGE PROFILE

1 1/4" TOP

3/8" BUMPER T-MOLD

D 4MM T-MOLD

3/4" TOP

C 4MM T-MOLD

V BULLET T-MOLD

Make it mobile with 3" casters

Order Model 17576

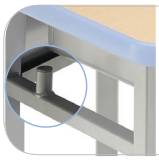

Patented backpack peg keeps student items organized, can be positioned inside or outside of either leg.

model #01267 Huddle-8LS shown with optional Cascade SW Tote Tray w/ housing model #30925.

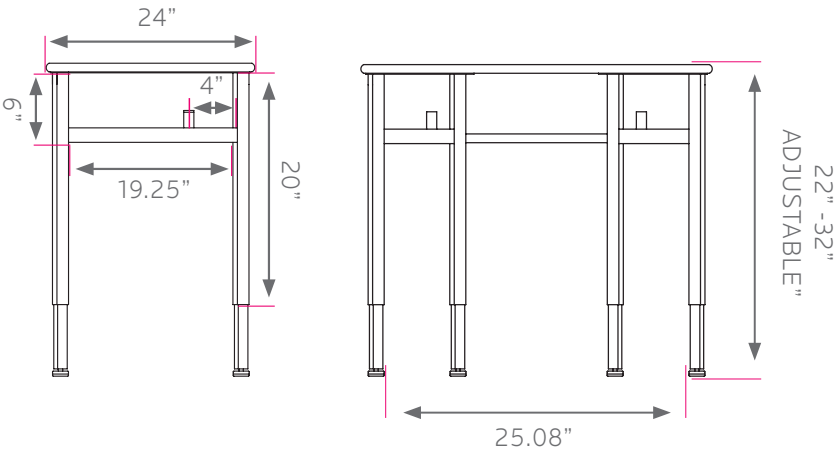

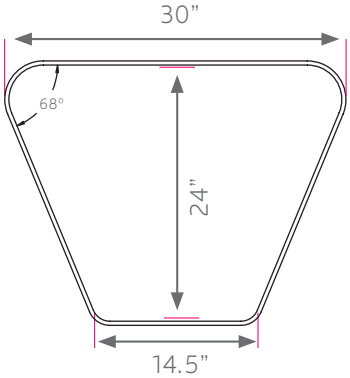

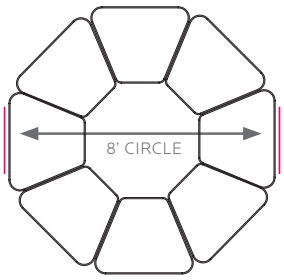

Huddle Frame Color Options

BLACK
BLA

PLATINUM
PLT

Standard Laminate Options

Want to specify a different laminate?

No problem. If you have 20 or more tops of the same color -60 or -38 there is no upcharge. Have 20 or less? We can quote for you with the Wilsonart code and – finish style. We can specify other laminates – call to inquire and get a quote.

Wilsonart®

Suggested Standard Laminates:

ASIAN NIGHT
7949-60
ANG

BOARDWALK OAK
7983-60
BWK

PEWTER MESH
4878-60
PEW

CLASSIC LINEN
4943-60
CLN

HIGH RISE
4996-60
HRE

BUKA BARK
7982-60
BBK

PALISADES OAK
7987-60
PSO

FLAX LINEN
4990-60
FLL

MISSION MAPLE
7990-60
MIM

NEW AGE OAK
7938-60
NEW

Classic Standard Laminates:

WILD CHERRY
7054-60
CHE

GREY NEBULA
4622-60
GNB

FUSION MAPLE
7909-60
MAP

All 13 of the standard laminates are -60 finish, if you need to match a laminate from a previous year, please let us know on your order (example Pewter Mesh 4878-38, our standard is -60).

Standard Edge Color Options

APPLE **A**
BLACK **B**
BLUEBERRY **C**
BURGUNDY **D**
CERULEAN **S**
CHAMPAGNE **O**
CHARCOAL **R**
CHOCOLATE **Q**
CLEMENTINE **E**
FOREST GREEN **F**
FUCHSIA **G**
MINT **H**
MOCHA **T**
NAVY **I**
ORANGE **U**
PERSIAN BLUE **J**
PLATINUM **P**
PURPLE **K**
RED **L**
YELLOW **N**