Smith System®
Specification Sheet
WWW.SMITHSYSTEM.COM

Silhouette™ Student Desk

Silhouette 20x27 Fixed Height Single Student Desk

MODEL#: 01649, 01649PLASTIC

Model # Shown: 01650

OVERVIEW

Shipped ready to assemble, these desks have a heavy-duty work surface that won't sag under heavy books or equipment. The Silhouette Desk is great for rows, pairs, or groupings for collaborative learning.

MATERIALS

There are two options for the work surface, hard plastic and laminate. The laminate work surface consists of a 45 lb density particle board core with a .030" high pressure laminated surface and a .020" melamine backer sheet. The edge of the work surface features 3/8" bumper edge molding that is fastened every 6 to 8 inches to assure a long lasting fit. The frame is attached to the pre-drilled holes in the top with (6) #10 screws through a 1" x 1.75" 18-gauge steel channel. The mounting channel is welded to a 1" x 2" rectangular 16-gauge steel tube leg. The leg inserts are 1" x 1.75" 16-gauge steel tube and are fixed in height at 29.5". Both the laminate and hard plastic tops are Greenguard gold certified.

The legs are tied together for added strength with a 1" x 2" 16-gauge steel tube stretcher bar and (4) bolts. Legs have 1" leveling glides. The backpack hook can hold up to 45 lbs. Book Box is optional, all welded 22-gauge steel construction that has a curled hem on the front opening. Book box comes in a black powdercoat finish, or Platinum is special order only.
*Book box sold seperately.

TOP AND EDGE OPTIONS

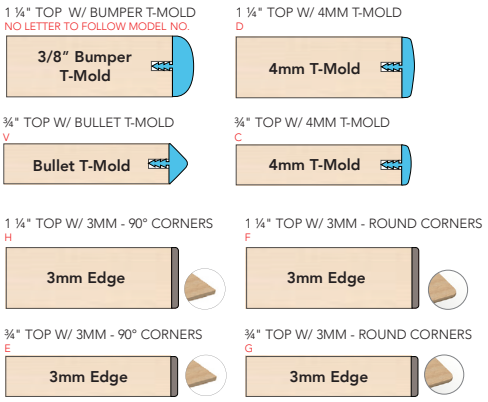

DIMENSIONS

Model	Description	D"	W"	H"	WT
01649	Single-Student 20x27 Fixed Height Desk w/glides	20	27	29.5	40
01649PLASTIC	Single-Student 20x27 Fixed Height Desk w/glides - Hard Plastic	20	27	28.5	41
Optional Accessories - 01649					
17190	Steel Bookbox	15	20	4	8
17018	Technology Basket	13	10	2	1
17200	Wire Bookbasket	15	18	3.5	5
30933	SW (Standard Width) 3" SW Tote w/housing	17.25	12.75	5	3.1
30934	SW (Standard Width) Housing Only	16.75	12.75	2.75	
30935	EW (Extra Wide) 3" EW Tote w/housing	17.25	19	4.25	7.3
30936	EW (Extra Wide) Housing Only	16.75	19	2.25	
Optional Accessories - 01649PLASTIC					
12008	Steel Bookbox	15	20	4	8
12006	SW (Standard Width) 3" SW Tote w/housing	17.25	12.75	5	3.1
12007	SW (Standard Width) Housing Only	16.75	12.75	2.75	
Optional Accessories					
17570BLA	3" Dual-Wheel Caster Pack (Set of 4, 4 locking)-Black	3 dia.			5
17570XXX	3" Dual-Wheel Caster Pack (Set of 4, 4 locking)-Colors (PLT, CGR, ORG, CER, APL)	3 dia.			5

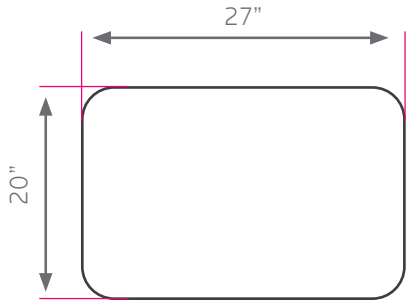

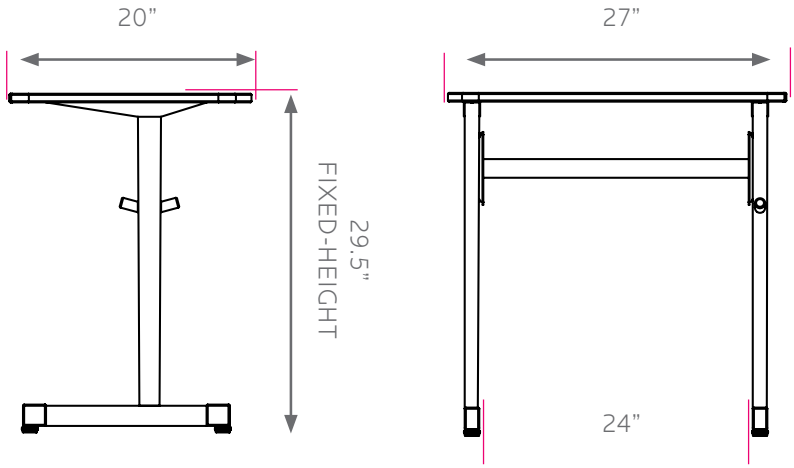

STANDARD LAMINATE OPTIONS

Want to specify a different laminate?

No problem. If you have 20 or more tops of the same color -60 or -38 there is no upcharge. Have 20 or less? We can quote for you with the Wilsonart code and – finish style. We can specify other laminates – call to inquire and get a quote.

SUGGESTED SURFACE LAMINATE OPTIONS 7 8 9

ARCTIC WHITE
S2730-60

ASH WENGE
S3404-60

ASIAN NIGHT
7949-60

BOARDWALK OAK
7983-60

BUKA BARK
7982-60

CLASSIC LINEN
4943-60

CLAY WENGE
S3407-60

CLEAR MAPLE
S2409-38

FLAX LINEN
4990-60

FRENCH PEAR
8220-60

FUSION MAPLE
7909-60

GREY NEBULA
4622-60

HIGH RISE
4996-60

MISSION MAPLE
7990-60

NEW AGE OAK
7938-60

NORTH SEA GRAY
D90-60

PALISADES OAK
7987-60

PEWTER MESH
4878-60

STORM WENGE
S3405-60

VIRGINIA WALNUT
S2535-38

PLASTIC TOP SURFACE OPTIONS

FUSION MAPLE

GREY NEBULA

All 20 of the standard laminates are -60 finish, if you need to match a laminate from a previous year, please let us know on your order (example Pewter Mesh 4878-38, our standard is -60).

When the WilsonArt Laminate code includes a "Y", "K", "-12" "-78","Aeon" etc, these are special laminates with an upcharge, even when it contains -38 or -60.

STANDARD EDGE COLOR OPTIONS 10

APPLE

BLACK

CERULEAN

CHARCOAL

NAVY

PERSIAN BLUE

PLATINUM

LEG COLOR OPTIONS

BLACK

PLATINUM

EDGE COLOR OPTIONS WITH ADDITIONAL LEAD TIME 10

BLUEBERRY

BURGUNDY

CHAMPAGNE

FOREST GREEN

ORANGE

PURPLE

RED

YELLOW