Smith System®
Specification Sheet
WWW.SMITHSYSTEM.COM

# *Silhouette™ Student Desk*

## Silhouette Curve Fixed Height Desk

MODEL#: 01657

### DIMENSIONS

| Model | Description | D" | W" | H" | WT |
|---|---|---|---|---|---|
| 01657 | Curve Fixed Height Desk w/casters | 21 | 29 | 29.5 | 36 |
| **Optional Accessories** | | | | | |
| 17190 | Steel Bookbox | 15 | 20 | 4 | 8 |
| 17200 | Wire Bookbasket | 15 | 18 | 3.5 | 5 |
| 17018 | Technology Basket | 13 | 10 | 2 | 1 |
| 30933 | SW (Standard Width) 3" SW Tote w/housing | 17.25 | 12.75 | 5 | 3.1 |
| 30935 | EW (Extra Wide) 3" EW Tote w/housing | 17.25 | 19 | 4.25 | 7.3 |

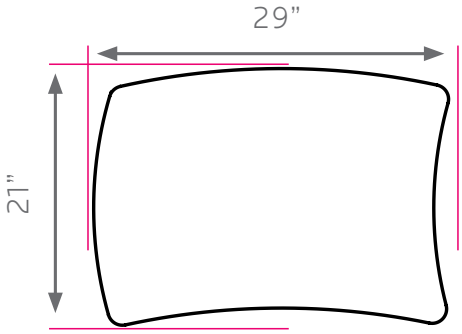


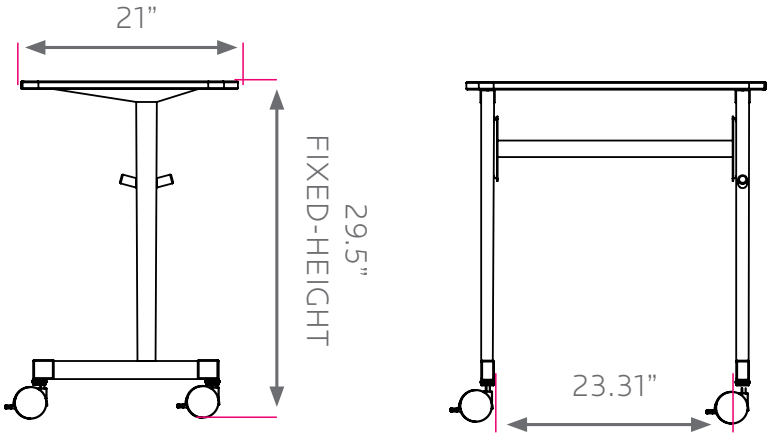


### OVERVIEW

Shipped ready to assemble, these desks have a heavy-duty work surface that won't sag under heavy books or equipment. The Silhouette Sequence Desk is great for rows, pairs, or collaborative pods for learning in groups.

### MATERIALS

The work surface consists of a 45 lb density particle board core with a .030" high pressure laminated surface and a .020" melamine backer sheet. The edge of the work surface features 3/8" bumper edge molding that is fastened every 6 to 8 inches to assure a long lasting fit. The frame is attached to the pre-drilled holes in the top with (6) #10 screws through a 1" x 1.75" 18-gauge steel channel. The mounting channel is welded to a 1" x 2" rectangular 16-gauge steel tube leg. The leg inserts are 1" x 1.75" 16-gauge steel tube and are fixed in height at 29.5". Model 01657 comes standard with a lockable endcap/glide combination. The legs are tied together for added strength with a 1" x 2" 16-gauge steel tube stretcher bar and (4) bolts.

### TOP AND EDGE OPTIONS

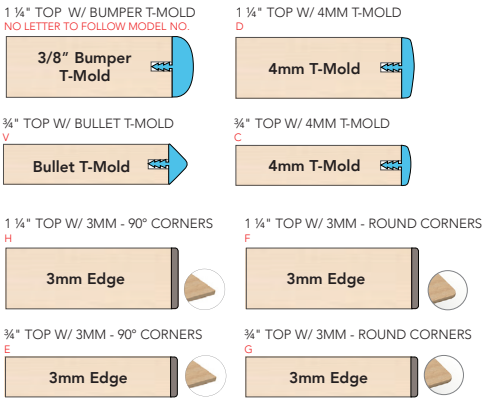

## STANDARD LAMINATE OPTIONS

Want to specify a different laminate?

No problem. If you have 20 or more tops of the same color -60 or -38 there is no upcharge. Have 20 or less? We can quote for you with the Wilsonart code and – finish style. We can specify other laminates – call to inquire and get a quote.

## SUGGESTED LAMINATE OPTIONS

ARCTIC WHITE
S2730-60

ASH WENGE
S3404-60

ASIAN NIGHT
7949-60

BOARDWALK OAK
7983-60

BUKA BARK
7982-60

CLASSIC LINEN
4943-60

CLAY WENGE
S3407-60

CLEAR MAPLE
S2409-38

FLAX LINEN
4990-60

FRENCH PEAR
8220-60

FUSION MAPLE
7909-60

GREY NEBULA
4622-60

HIGH RISE
4996-60

MISSION MAPLE
7990-60

NEW AGE OAK
7938-60

NORTH SEA GRAY
D90-60

PALISADES OAK
7987-60

PEWTER MESH
4878-60

STORM WENGE
S3405-60

VIRGINIA WALNUT
S2535-38

All 20 of the standard laminates are -60 finish, if you need to match a laminate from a previous year, please let us know on your order (example Pewter Mesh 4878-38, our standard is -60).

When the WilsonArt Laminate code includes a “Y”, “K”, “-12” “-78”,“Aeon” etc, these are special laminates with an upcharge, even when it contains -38 or -60.

## STANDARD EDGE COLOR OPTIONS

APPLE

BLACK

CERULEAN

CHARCOAL

NAVY

PERSIAN BLUE

PLATINUM

## EDGE COLOR OPTIONS WITH ADDITIONAL LEAD TIME

BLUEBERRY

BURGUNDY

CHAMPAGNE

FOREST GREEN

ORANGE

PURPLE

RED

YELLOW

## LEG COLOR OPTIONS

BLACK

PLATINUM