Smith System®
Specification Sheet
WWW.SMITHSYSTEM.COM

Interchange® Student Desks

Interchange Mini Diamond Desk

MODEL#: 03083

OVERVIEW

Our Interchange Mini Diamond Desk offers ample leg-to-leg space while functioning as a collaborative workspace for each student. The Mini Diamond is slightly smaller than the regular Diamond Desk, which allows more room for collaboration in the classroom.

MATERIALS

The work surface consists of a 45 lb density particle board core with a 0.030" high pressure laminated surface and a 0.020" melamine backer sheet. The edge of the work surface features a t-mold edge that is mechanically fastened to the underside of the work surface every 6 to 8 inches to assure a long lasting fit. 1 1/4" or 3/4" thick top.

The frame consists of three fully welded segments. Ellipse shaped tubes measure 1.5" x 2.5". 16-gauge leg inserts and leg stems are welded to 14-gauge plates. Top is predrilled to attach legs using included fasteners. Legs include a 1" adjustable leveling glide with a locking stop to provide stability on uneven floors.

TOP AND EDGE OPTIONS

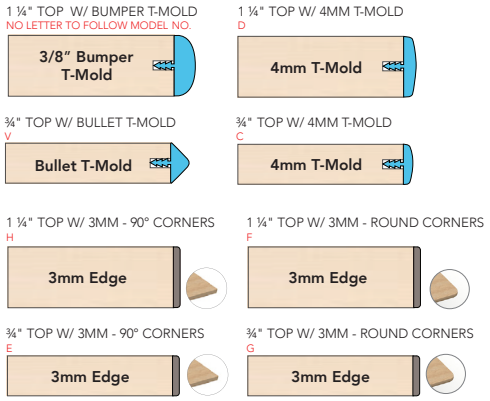

DIMENSIONS

Model	Description	D"	W"	H"	WT
03083	Interchange Mini Diamond Desk	27	30.5	22-34	42

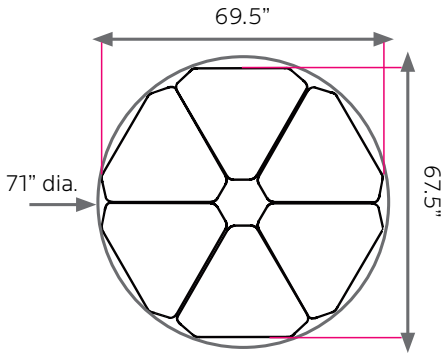

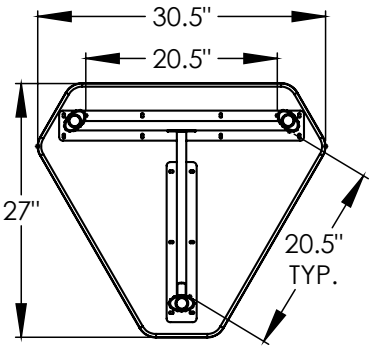

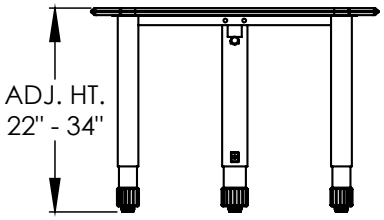

STANDARD LAMINATE OPTIONS

Want to specify a different laminate?

No problem. If you have 20 or more tops of the same color -60 or -38 there is no upcharge. Have 20 or less? We can quote for you with the Wilsonart code and – finish style. We can specify other laminates – call to inquire and get a quote.

Make it mobile with 3" casters
Order Model 17570BLA

SUGGESTED LAMINATE OPTIONS

ARCTIC WHITE S2730-60	ASH WENGE S3404-60	ASIAN NIGHT 7949-60	BOARDWALK OAK 7983-60	BUKA BARK 7982-60	CLASSIC LINEN 4943-60	CLAY WENGE S3407-60
CLEAR MAPLE S2409-38	FLAX LINEN 4990-60	FRENCH PEAR 8220-60	FUSION MAPLE 7909-60	GREY NEBULA 4622-60	HIGH RISE 4996-60	MISSION MAPLE 7990-60
NEW AGE OAK 7938-60	NORTH SEA GRAY D90-60	PALISADES OAK 7987-60	PEWTER MESH 4878-60	STORM WENGE S3405-60	VIRGINIA WALNUT S2535-38	

All 20 of the standard laminates are -60 finish, if you need to match a laminate from a previous year, please let us know on your order (example Pewter Mesh 4878-38, our standard is -60).

When the WilsonArt Laminate code includes a "Y", "K", "-12" "-78","Aeon" etc, these are special laminates with an upcharge, even when it contains -38 or -60.

STANDARD EDGE COLOR OPTIONS

APPLE	BLACK	CERULEAN	CHARCOAL
NAVY	PERSIAN BLUE	PLATINUM	

EDGE COLOR OPTIONS WITH ADDITIONAL LEAD TIME

BLUEBERRY	BURGUNDY	CHAMPAGNE	FOREST GREEN
ORANGE	PURPLE	RED	YELLOW

LEG COLOR OPTIONS

BLACK	PLATINUM

add Cascade tote-tray storage.
Order Model 30933