Smith System®
Specification Sheet
WWW.SMITHSYSTEM.COM

Interchange® Student Desks

Interchange Mini Diamond Open Front Desk

MODEL#: 04505

OVERVIEW

The Interchange Open Front Desk combines the spacious flexibility of our Interchange Student Desks with the convenience of built-in bookboxes. The Interchange Open Front Desk is available in both 3/4" and 1 1/4" thick work surface (see top & edge profiles).

MATERIALS

The work surface consists of a 45 lb density parti- cle board core with a 0.030" high pressure laminated surface and a 0.020" melamine backer sheet. The edge of the work surface features a t-mold edge that is mechanically fastened to the underside of the work surface every 6 to 8 inches to assure a long lasting fit. 1 1/4" or 3/4" thick top.

The legs have a rugged powdercoat finish that resists wear. The lower leg is constructed of 16-gauge steel and is chrome plated to resist scuffing. The sock style glide caps add protection against scratching floors and provide stability on uneven surfaces with their 1" adjustable leveling glides. Tabletop and legs are supported by one or more 2" x 3" channels with four breakovers for optimum strength.

The bookbox is constructed of 18-gauge formed and weld- ed steel. The box features a convenient, integrated pencil retainer. The legs are simply, but securely fastened to the bookbox via 2 bolts per leg.

TOP AND EDGE OPTIONS

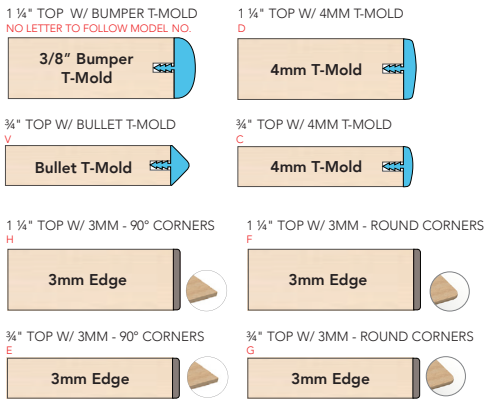

DIMENSIONS

Model	Description	D"	W"	H"	WT
04505	Interchange Mini Diamond Open Front Desk	27	30.5	22-32	50

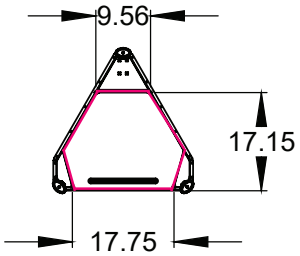

(bookbox dimensions)

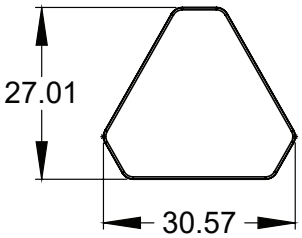

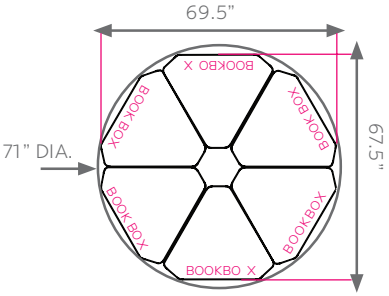

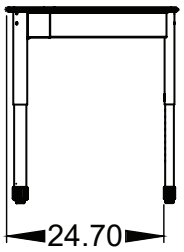

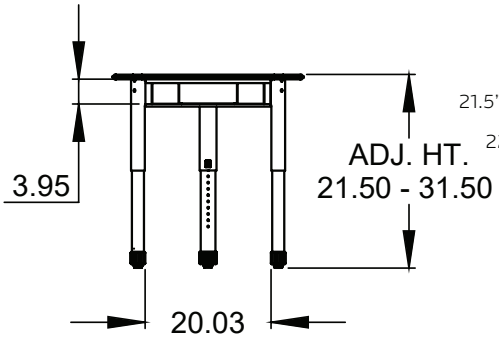

21.5" - 31.5" height (3/4" thick work surface)

22" - 32" height (1 - 1/4" thick work surface)

STANDARD LAMINATE OPTIONS

Want to specify a different laminate?

No problem. If you have 20 or more tops of the same color -60 or -38 there is no upcharge. Have 20 or less? We can quote for you with the Wilsonart code and – finish style. We can specify other laminates – call to inquire and get a quote.

Make it mobile with 3" casters
Order Model 17570BLA

SUGGESTED LAMINATE OPTIONS

ARCTIC WHITE S2730-60
ASH WENGE S3404-60
ASIAN NIGHT 7949-60
BOARDWALK OAK 7983-60
BUKA BARK 7982-60
CLASSIC LINEN 4943-60
CLAY WENGE S3407-60
CLEAR MAPLE S2409-38
FLAX LINEN 4990-60
FRENCH PEAR 8220-60
FUSION MAPLE 7909-60
GREY NEBULA 4622-60
HIGH RISE 4996-60
MISSION MAPLE 7990-60
NEW AGE OAK 7938-60
NORTH SEA GRAY D90-60
PALISADES OAK 7987-60
PEWTER MESH 4878-60
STORM WENGE S3405-60
VIRGINIA WALNUT S2535-38

All 20 of the standard laminates are -60 finish, if you need to match a laminate from a previous year, please let us know on your order (example Pewter Mesh 4878-38, our standard is -60).

When the WilsonArt Laminate code includes a "Y", "K", "-12" "-78","Aeon" etc, these are special laminates with an upcharge, even when it contains -38 or -60.

STANDARD EDGE COLOR OPTIONS

APPLE
BLACK
CERULEAN
CHARCOAL
NAVY
PERSIAN BLUE
PLATINUM

EDGE COLOR OPTIONS WITH ADDITIONAL LEAD TIME

BLUEBERRY
BURGUNDY
CHAMPAGNE
FOREST GREEN
ORANGE
PURPLE
RED
YELLOW

LEG COLOR OPTIONS

BLACK
PLATINUM