Smith System®
Specification Sheet
WWW.SMITHSYSTEM.COM

Silhouette™ Student Desk

Silhouette XL Sit+Stand Desk

MODEL#: 01634

OVERVIEW

With Sit+Stand, student's have the flexibility to choose their prefered position: sitting or standing. Styled to match the current line of Silhouette tables and desk, this mobile desk comes with lockable casters and angled legs to allow feet placement underneath desk. Please note - When arranged in collaborative pods, heights of table tops may vary.

MATERIALS

The 3/4" thick work surface consists of a 45 lb density particle board core with a 0.030" high pressure laminated surface and a 0.020" melamine backer sheet. The edge of the tabletop features your choice of a bullet t-mold edge or 4mm t-mold, which is then fastened to the underside of the work surface every 6 to 8 inches to assure a long lasting fit.

The base is constructed of cold rolled steel and the column is a combination of steel, aluminum, and plastic.

TOP AND EDGE OPTIONS

¾" TOP W/ BULLET T-MOLD
V

¾" TOP W/ 4MM T-MOLD
C

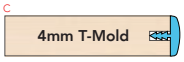

¾" TOP W/ 3MM - 90° CORNERS
E

¾" TOP W/ 3MM - ROUND CORNERS
G

OPTIONAL ACCESSORIES

Model 60100
Modesty Panel/Privacy Screen
Product Dimensions: 24"w x 14"h

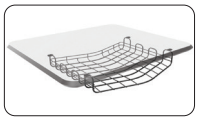

Model 76518
Technology Basket, low profile storage.
Product Dimensions: 10"d x 14"w x 3"h
Weight: 3 lbs.

DIMENSIONS

Model	Description	D"	W"	H"	WT
01634	XL Sit+Stand 24x30 Rectangle	24	30	26-41	48
	Top Dimensions	24	30		

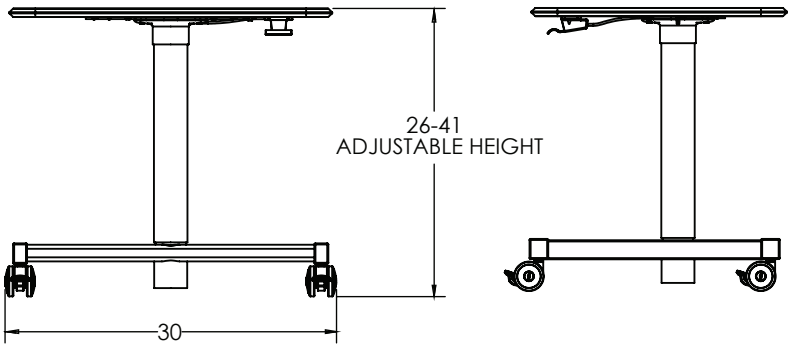

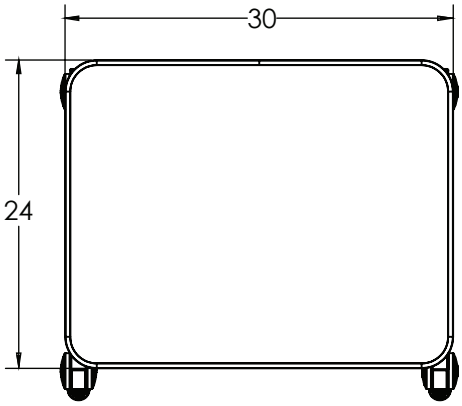

STANDARD LAMINATE OPTIONS

Want to specify a different laminate?

No problem. If you have 20 or more tops of the same color -60 or -38 there is no upcharge. Have 20 or less? We can quote for you with the Wilsonart code and – finish style. We can specify other laminates – call to inquire and get a quote.

SUGGESTED LAMINATE OPTIONS

ARCTIC WHITE
S2730-60

ASH WENGE
S3404-60

ASIAN NIGHT
7949-60

BOARDWALK OAK
7983-60

BUKA BARK
7982-60

CLASSIC LINEN
4943-60

CLAY WENGE
S3407-60

CLEAR MAPLE
S2409-38

FLAX LINEN
4990-60

FRENCH PEAR
8220-60

FUSION MAPLE
7909-60

GREY NEBULA
4622-60

HIGH RISE
4996-60

MISSION MAPLE
7990-60

NEW AGE OAK
7938-60

NORTH SEA GRAY
D90-60

PALISADES OAK
7987-60

PEWTER MESH
4878-60

STORM WENGE
S3405-60

VIRGINIA WALNUT
S2535-38

All 20 of the standard laminates are -60 finish, if you need to match a laminate from a previous year, please let us know on your order (example Pewter Mesh 4878-38, our standard is -60).

When the WilsonArt Laminate code includes a “Y”, “K”, “-12” “-78”,“Aeon” etc, these are special laminates with an upcharge, even when it contains -38 or -60.

STANDARD EDGE COLOR OPTIONS

APPLE

BLACK

CERULEAN

CHARCOAL

NAVY

PERSIAN BLUE

PLATINUM

EDGE COLOR OPTIONS WITH ADDITIONAL LEAD TIME

BLUEBERRY

BURGUNDY

CHAMPAGNE

FOREST GREEN

ORANGE

PURPLE

RED

YELLOW

LEG COLOR OPTIONS

BLACK

PLATINUM