Smith System®
Specification Sheet
WWW.SMITHSYSTEM.COM

Elemental® Activity Table

Elemental 60" Trapezoid Nest and Fold Table

MODEL#: NL60TR - EF

OVERVIEW

Elemental Nest & Fold tables have 5 frame colors, with matching colored casters standard. The unique colored legs are fixed in height at 30" high. The tables' work surface flips upwards for convenient nesting.

MATERIALS

The 1 1/4" thick work surface consists of a 45 lb density particle board core with a 0.030" high pressure laminated surface and a 0.020" melamine backer sheet. The edge of the tabletop features your choice of a 3/8" bumper t-mold or 4mm t-mold, which is then fastened to the underside of the work surface every 6 to 8 inches to assure a long lasting fit. Mounted under the work surface is a 11 gauge steel stiffener for reinforcement.

LEG STYLE

The Elemental let sets are constructed of 16-gauge steel with a durable powdercoat paint finish in one of five colors. The pull-bar and mounting beam are also constructed of 16-gauge steel.

COLOR MATCHING CASTERS

Casters are included with Elemental Nest & Fold

BUILD PART NUMBER

NL	6 0 T R	7 8 9	10	11 12 13	E F
	Choose **MODEL**	Pick Laminate Color	Pick Edge Color	Pick Leg Color	Pick Leg Style

DIMENSIONS

Model	Description	D"	W"	H"	WT
NL60TR - EF	Trapezoid 60" Nest and Fold Table - FIxed Height	30	60	30	109

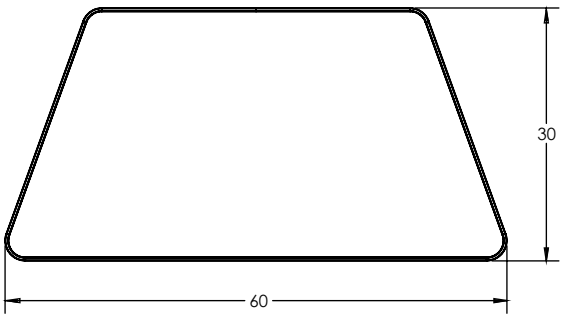

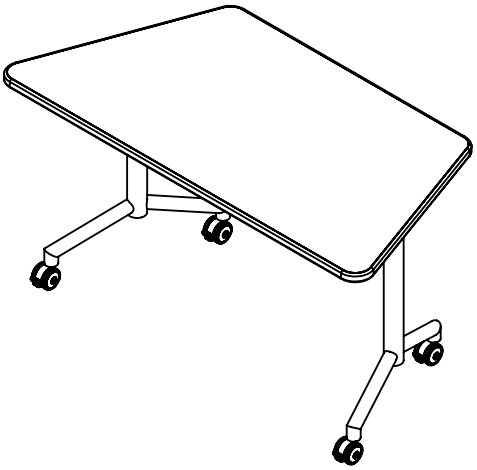

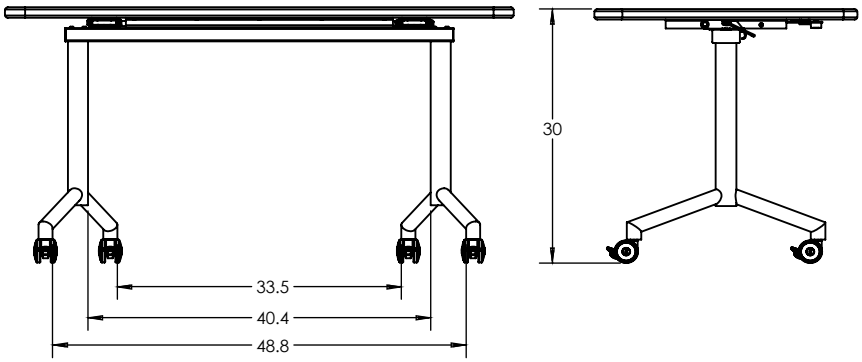

STANDARD LAMINATE OPTIONS

Want to specify a different laminate?

No problem. If you have 20 or more tops of the same color -60 or -38 there is no upcharge. Have 20 or less? We can quote for you with the Wilsonart code and – finish style. We can specify other laminates – call to inquire and get a quote.

Top and Edge Options: 1 2

Standard (NL)

1 ¼" TOP W/ BUMPER T-MOLD
NO LETTER TO FOLLOW MODEL NO.

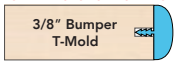

1 ¼" TOP W/ 3MM - 90° CORNERS
H

1 ¼" TOP W/ 4MM T-MOLD
D

1 ¼" TOP W/ 3MM - ROUND CORNERS
F

SUGGESTED SURFACE LAMINATE OPTIONS 7 8 9

ARCTIC WHITE S2730-60	ASH WENGE S3404-60	ASIAN NIGHT 7949-60	BOARDWALK OAK 7983-60	BUKA BARK 7982-60	CLASSIC LINEN 4943-60	CLAY WENGE S3407-60
CLEAR MAPLE S2409-38	FLAX LINEN 4990-60	FRENCH PEAR 8220-60	FUSION MAPLE 7909-60	GREY NEBULA 4622-60	HIGH RISE 4996-60	MISSION MAPLE 7990-60
NEW AGE OAK 7938-60	NORTH SEA GRAY D90-60	PALISADES OAK 7987-60	PEWTER MESH 4878-60	STORM WENGE S3405-60	VIRGINIA WALNUT S2535-38	

All 20 of the standard laminates are -60 finish, if you need to match a laminate from a previous year, please let us know on your order (example Pewter Mesh 4878-38, our standard is -60).

When the WilsonArt Laminate code includes a "Y", "K", "-12" "-78","Aeon" etc, these are special laminates with an upcharge, even when it contains -38 or -60.

STANDARD EDGE COLOR OPTIONS 10

APPLE	BLACK	CERULEAN	CHARCOAL
NAVY	PERSIAN BLUE	PLATINUM	

EDGE COLOR OPTIONS WITH ADDITIONAL LEAD TIME 10

BLUEBERRY	BURGUNDY	CHAMPAGNE	FOREST GREEN
ORANGE	PURPLE	RED	YELLOW

LEG COLOR OPTIONS *Additional Lead Time 11 12 13

APPLE	CERULEAN	CHARCOAL
PLATINUM	ORANGE*	