Smith System®
Specification Sheet
WWW.SMITHSYSTEM.COM

Agree™

Agree 20"x34" Rectangle Table

MODEL#: 02501, 02501F

OVERVIEW

The Agree Table was created to support the evolving needs of upper-grade classrooms, CTE spaces, and higher education environments. As instruction becomes more collaborative, technology-rich, and student-driven, the Agree Table provides a clean, professional foundation that adapts to how learning happens today, while signaling a more adult, high aesthetic experience for students.

MATERIALS

High-pressure laminate (HPL) worksurfaces are 1-1/8" (30mm) nominal finished thickness and feature balanced construction to prevent bowing or warping, with 0.028 inch (.71mm) thick high-pressure laminate on the top surface and a resin backer on the bottom. The particleboard wood core is 45 lb/cu ft (720.8 kg/cu m) density. The laminate and backer are permanently attached with PVA adhesive and reinforced under pressure to the wood core. 1/8" (3mm) thick plastic edgeband is applied to the entire perimeter of the worksurface to prevent any outgassing from exposed wood core. T-mold also available.

Formed tubular steel leg is 1-1/2" (40mm) dia. x 13 ga. (.095" or 2mm nom.) welded to a 5-1/2" (140mm) x 6-1/16" (154.5mm) mounting plate of 3/16" thick (4.7mm) thick steel. Optional 3" (68.6mm) dual wheel swivel casters.

AGREE TOP & EDGE PROFILE

1 ¼" TOP W/ BUMPER T-MOLD
NO LETTER TO FOLLOW MODEL NO.

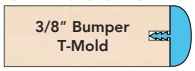

1 ¼" TOP W/ 3MM - 90° CORNERS
H

1 ¼" TOP W/ 4MM T-MOLD
D

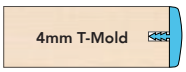

1 ¼" TOP W/ 3MM - ROUND CORNERS
F

DIMENSIONS

Model	Description	D"	W"	H"
02501	20"x34" Rectangle Table	20	34	28.5
02501F	20"x34" Rectangle Table w/ 3mm Edgeband	20	34	28.5

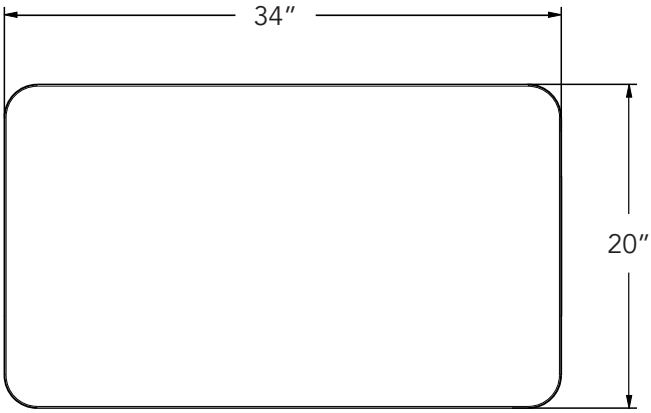

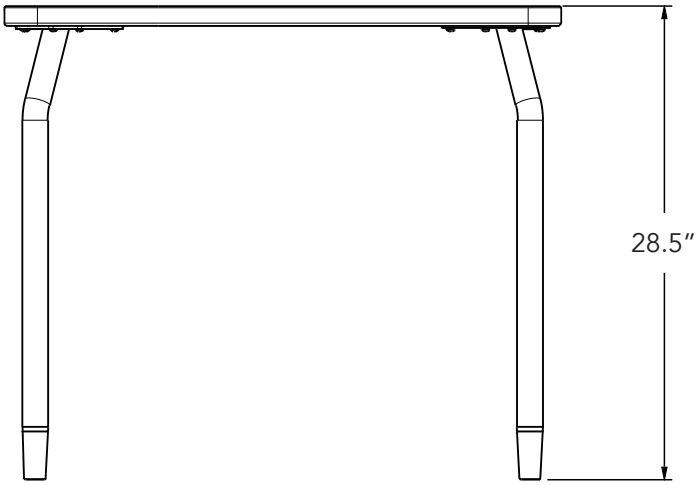

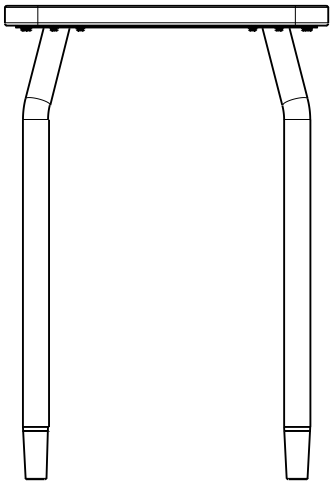

STANDARD LAMINATE OPTIONS

Want to specify a different laminate?

No problem. If you have 20 or more tops of the same color -60 or -38 there is no upcharge. Have 20 or less? We can quote for you with the Wilsonart code and finish style. We can specify other laminates – call to inquire and get a quote.

Make it mobile with 3" casters

Order Model 17570BLA

SUGGESTED LAMINATE OPTIONS

ARCTIC WHITE S2730-60	ASH WENGE S3404-60	ASIAN NIGHT 7949-60	BOARDWALK OAK 7983-60	BUKA BARK 7982-60	CLASSIC LINEN 4943-60	CLAY WENGE S3407-60
CLEAR MAPLE S2409-38	FLAX LINEN 4990-60	FRENCH PEAR 8220-60	FUSION MAPLE 7909-60	GREY NEBULA 4622-60	HIGH RISE 4996-60	MISSION MAPLE 7990-60
NEW AGE OAK 7938-60	NORTH SEA GRAY D90-60	PALISADES OAK 7987-60	PEWTER MESH 4878-60	STORM WENGE S3405-60	VIRGINIA WALNUT S2535-38	

All 20 of the standard laminates are -60 finish, if you need to match a laminate from a previous year, please let us know on your order (example Pewter Mesh 4878-38, our standard is -60).

When the WilsonArt Laminate code includes a "Y", "K", "-12" "-78","Aeon" etc, these are special laminates with an upcharge, even when it contains -38 or -60.

STANDARD EDGE COLOR OPTIONS

APPLE	BLACK	CERULEAN	CHARCOAL
NAVY	PERSIAN BLUE	PLATINUM	

EDGE COLOR OPTIONS WITH ADDITIONAL LEAD TIME

BLUEBERRY	BURGUNDY	CHAMPAGNE	FOREST GREEN
ORANGE	PURPLE	RED	YELLOW

LEG COLOR OPTIONS

PLATINUM