**Smith System®**
Specification Sheet
WWW.SMITHSYSTEM.COM

*Agree™*

# Agree 24"x34" Rectangle Table

MODEL#: 02505, 02505F

## OVERVIEW

The Agree Table was created to support the evolving needs of upper-grade classrooms, CTE spaces, and higher education environments. As instruction becomes more collaborative, technology-rich, and student-driven, the Agree Table provides a clean, professional foundation that adapts to how learning happens today, while signaling a more adult, high aesthetic experience for students.

## MATERIALS

High-pressure laminate (HPL) worksurfaces are 1-1/8" (30mm) nominal finished thickness and feature balanced construction to prevent bowing or warping, with 0.028 inch (.71mm) thick high-pressure laminate on the top surface and a resin backer on the bottom. The particleboard wood core is 45 lb/cu ft (720.8 kg/cu m) density. The laminate and backer are permanently attached with PVA adhesive and reinforced under pressure to the wood core. 1/8" (3mm) thick plastic edgeband is applied to the entire perimeter of the worksurface to prevent any outgassing from exposed wood core. T-mold also available.

Formed tubular steel leg is 1-1/2" (40mm) dia. x 13 ga. (.095" or 2mm nom.) welded to a 5-1/2" (140mm) x 6-1/16" (154.5mm) mounting plate of 3/16" thick (4.7mm) thick steel. Optional 3" (68.6mm) dual wheel swivel casters.

## AGREE TOP & EDGE PROFILE

1 ¼" TOP W/ BUMPER T-MOLD
NO LETTER TO FOLLOW MODEL NO.

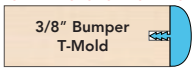


1 ¼" TOP W/ 3MM - 90° CORNERS
H

1 ¼" TOP W/ 4MM T-MOLD
D

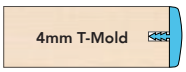


1 ¼" TOP W/ 3MM - ROUND CORNERS
F

## DIMENSIONS

| Model | Description | D" | W" | H" |
|---|---|---|---|---|
| 02505 | 24"x34" Rectangle Table | 24 | 34 | 28.5 |
| 02505F | 24"x34" Rectangle Table w/ 3mm Edgeband | 24 | 34 | 28.5 |

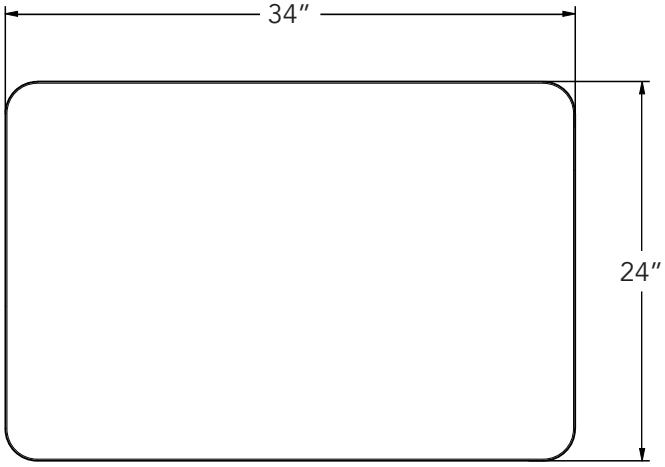


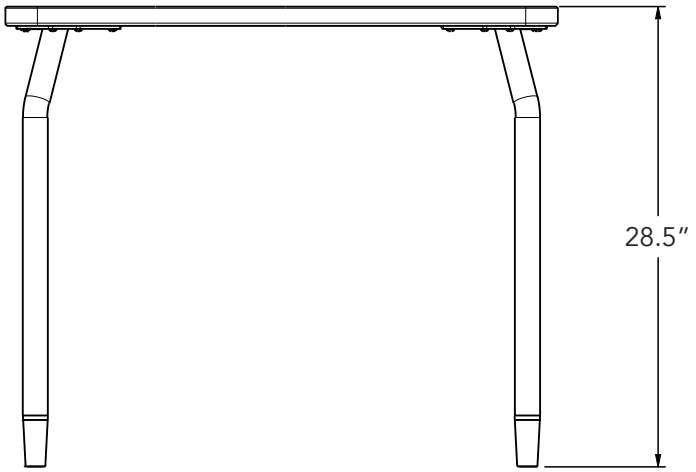


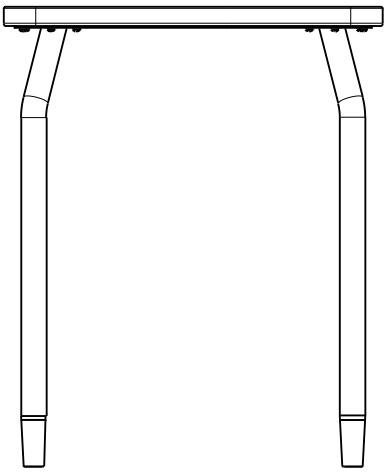

## STANDARD LAMINATE OPTIONS

Want to specify a different laminate?

No problem. If you have 20 or more tops of the same color -60 or -38 there is no upcharge. Have 20 or less? We can quote for you with the Wilsonart code and finish style. We can specify other laminates – call to inquire and get a quote.

**Make it mobile with 3" casters**

Order Model 17570BLA

## SUGGESTED LAMINATE OPTIONS

| | | | | | | |
|---|---|---|---|---|---|---|
| ARCTIC WHITE S2730-60 | ASH WENGE S3404-60 | ASIAN NIGHT 7949-60 | BOARDWALK OAK 7983-60 | BUKA BARK 7982-60 | CLASSIC LINEN 4943-60 | CLAY WENGE S3407-60 |
| CLEAR MAPLE S2409-38 | FLAX LINEN 4990-60 | FRENCH PEAR 8220-60 | FUSION MAPLE 7909-60 | GREY NEBULA 4622-60 | HIGH RISE 4996-60 | MISSION MAPLE 7990-60 |
| NEW AGE OAK 7938-60 | NORTH SEA GRAY D90-60 | PALISADES OAK 7987-60 | PEWTER MESH 4878-60 | STORM WENGE S3405-60 | VIRGINIA WALNUT S2535-38 | |

All 20 of the standard laminates are -60 finish, if you need to match a laminate from a previous year, please let us know on your order (example Pewter Mesh 4878-38, our standard is -60).

When the WilsonArt Laminate code includes a "Y", "K", "-12" "-78","Aeon" etc, these are special laminates with an upcharge, even when it contains -38 or -60.

## STANDARD EDGE COLOR OPTIONS

| | | | |
|---|---|---|---|
| APPLE | BLACK | CERULEAN | CHARCOAL |
| NAVY | PERSIAN BLUE | PLATINUM | |

## EDGE COLOR OPTIONS WITH ADDITIONAL LEAD TIME

| | | | |
|---|---|---|---|
| BLUEBERRY | BURGUNDY | CHAMPAGNE | FOREST GREEN |
| ORANGE | PURPLE | RED | YELLOW |

## LEG COLOR OPTIONS

PLATINUM